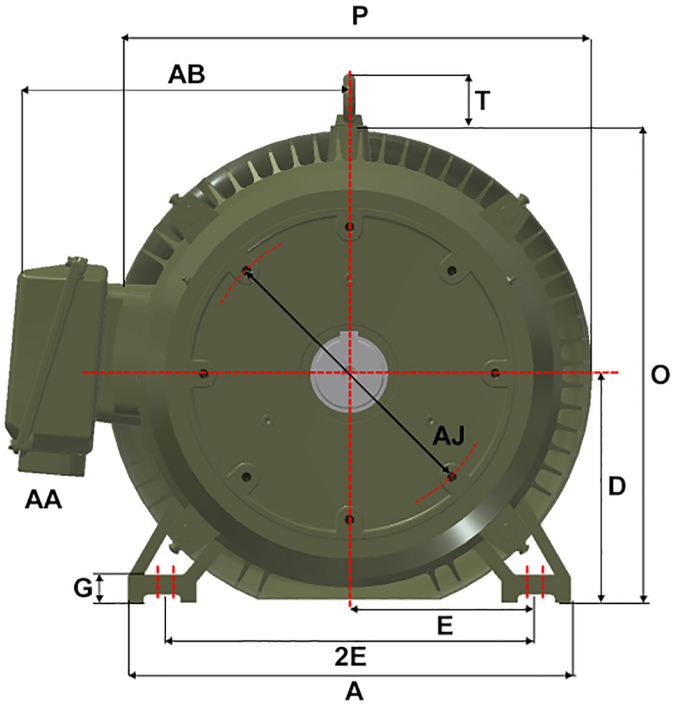

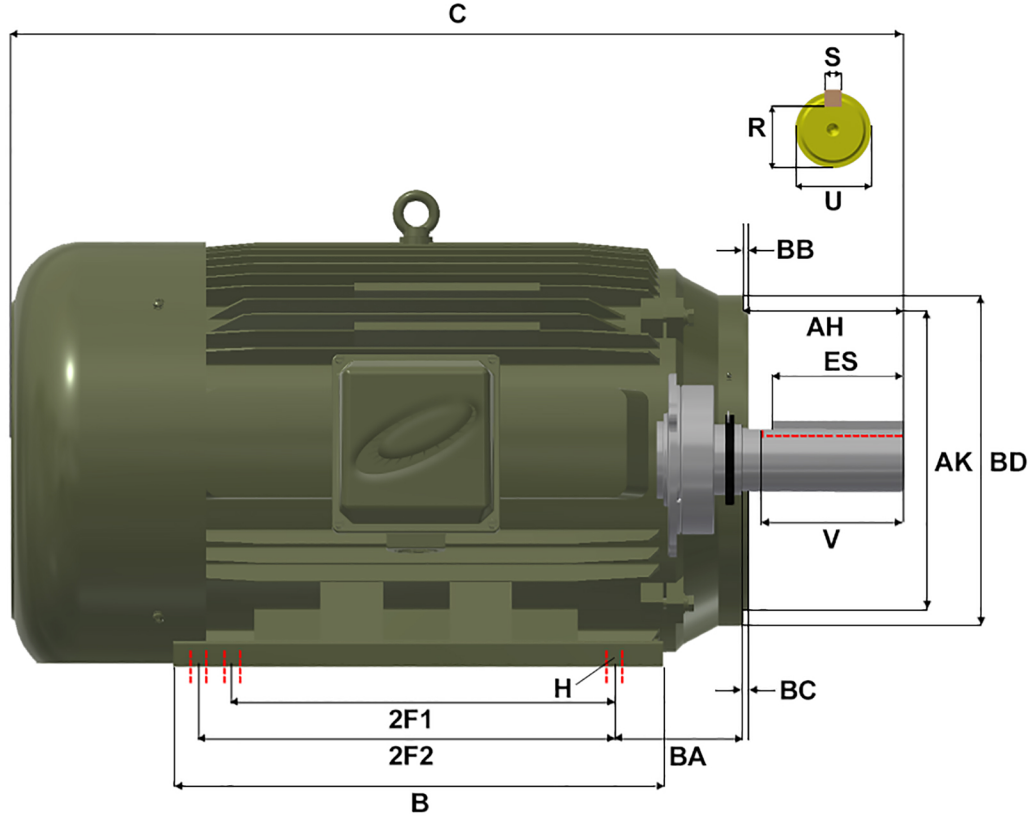

Version: 2WTI			Revised: 08-10-2019			HP	RPM	FRAME	ENCLOSURE	MPP/MQP-107C			
Customer is responsible in determining that MEP product will fit/perform suitably in the intended application						300	1800	449TC	TEFC				
A	B	C	D	E	2E	2F1	2F2	G	H	O	P	R	S
21.70	31.40	52.80	11.00	9.00	18.00	20.00	25.00	1.35	6 * 0.81	23.00	23.40	2.880	0.875
T	U	V	AA	AB	AH	AJ	AK	BA	BB	BC	BD	ES	
3.00	3.375	8.25	3 NPT	19.90	8.25	14.00	16.00	7.50	0.25	0.25	18.00	6.91	